EE-434 Power Electronics

Engr. Dr. Hadeed Ahmed Sher

Ghulam Ishaq Khan Institute of Engineering Sciences and Technology
Topi 23460, Pakistan

hadeed@giki.edu.pk

February 27, 2020

Overview

1. DC-DC Buck-Boost converter
   - Assumptions for analysis
   - Analysis for switch closed
   - Analysis for switch open
   - Transfer function derivation
   - Determining the component values
     - Inductance value
     - Capacitor value
   - Example 6-6
2. Application of basic converters in PV application
   - Characteristic curve of PV module
3. Application of basic converters in PV application
   - Characteristic curve of PV module
   - Buck converter for PV interfacing
4. Boost converter for PV application
5. Buck-Boost converter
6. Comparison of basic dc-dc converters
7. Insight about buck and boost converters

Introduction

The output voltage is always greater than the input voltage and hence it is called a boost converter.

Analysis is based on following.

- Steady-state conditions exist.
- Switching period is T, switch is closed for DT and open for (1-D)T
- Inductor is in CCM
- Output capacitor is large enough so that the voltage (V_o) is essentially constant.
- All components are ideal.

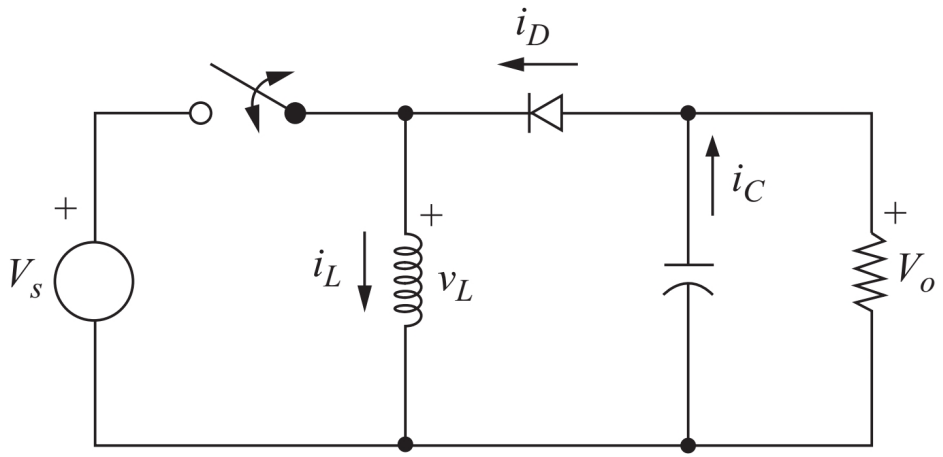

Analysis for switch closed $0 \leq T \leq DT$

The equivalent circuit with switch closed is shown below. Diode is reverse biased.

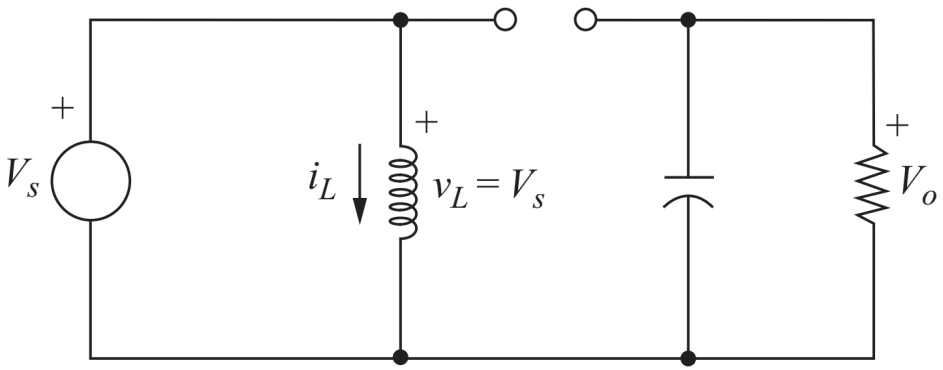

Applying KVL around the closed path

$$v_L = V_s = L\frac{di_L}{dt} \implies \frac{di_L}{dt} = \frac{V_s}{L} \tag{1}$$

Current increases linearly during this duration. The current starts from an initial value and ends at some value. So that the change in inductor current is given as

$$(\Delta i_L)_{closed} = \frac{V_s DT}{L} \tag{2}$$

Analysis for switch closed $0 \leq T \leq DT$

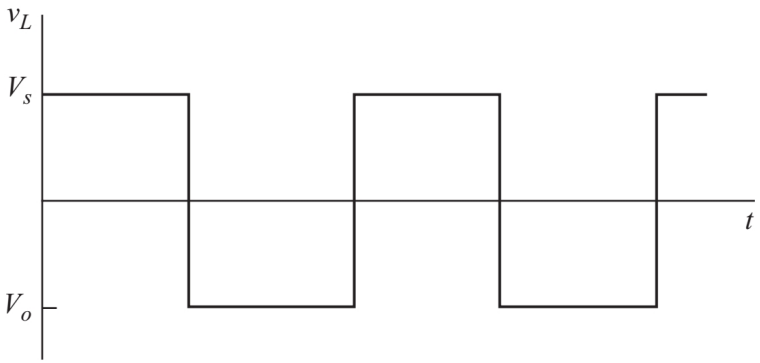

Figure: Inductor voltage

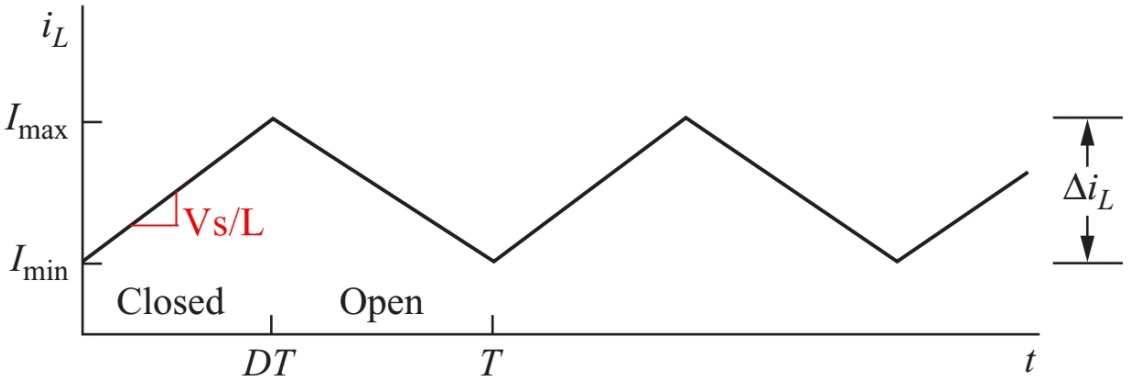

Figure: Inductor current

Analysis for switch open $DT \leq T \leq T$

The equivalent circuit with switch open is shown below. Diode is forward biased because inductor current needs a path.

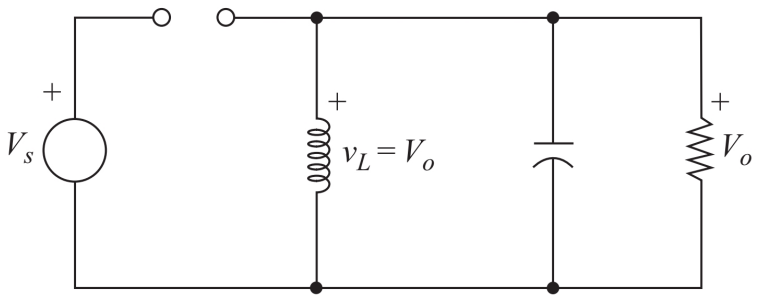

Applying KVL around the closed path

$$v_L = V_o = L\frac{di_L}{dt} \implies \frac{di_L}{dt} = \frac{V_o}{L} \tag{3}$$

Current decreases linearly during this duration. The current starts from the peak value and ends at some value. So that the change in inductor current is given as

$$(\Delta i_L)_{open} = \frac{(V_o)(1-D)T}{L} \tag{4}$$

Transfer function derivation

For steady state operation, the change in inductor current should be zero. Using (2) and (4)

$$\underbrace{(\Delta i_L)_{closed}}_{\frac{V_s D T}{L}} + \underbrace{(\Delta i_L)_{open}}_{\frac{(V_o)(1-D)T}{L}} = 0 \tag{5}$$

Solving for V_o,

$$V_o = -V_s\left(\frac{D}{1-D}\right) \tag{6}$$

$$D = \frac{|V_o|}{V_s + |V_o|} \tag{7}$$

Same can be obtained by equating the volt-sec product of inductor.

Transfer function derivation

Output voltage has opposite polarity from the source voltage.
Output voltage magnitude is less than source if D¡0.5.
Output voltage magnitude is more than source if D¿.5.
Output voltage magnitude is equal to the source if D=.5.
Polarity inversion is an issue for some applications.
Notice that, the source is never connected directly to the load in this converter.
The energy is stored in inductor when switch is closed, and is released to the load when switch is open, hence it is also called an indirect converter.

Determining the component values

For a lossless converter

$$\underbrace{P_{in}}_{V_s I_s = V_s I_L D} = \underbrace{P_o}_{\frac{V_o^2}{R}} \tag{8}$$

Here, the source current is related to average inductor current by

$$I_s = I_L D \tag{9}$$

Using (8),

$$\frac{V_o^2}{R} = V_s I_L D \tag{10}$$

Substituting for V_o using (6) and solving for I_L, we find

$$I_L = \frac{V_o^2}{V_s R D} = \frac{P_o}{V_s D} = \frac{V_s D}{R(1-D)^2} \tag{11}$$

The maximum and minimum inductor currents are determined by adding and subtracting ripple in the average current value.

Determining the component values

Maximum inductor current is

$$I_{max} = I_L + \frac{\Delta i_L}{2} = \frac{V_s D}{R(1-D)^2} + \frac{V_s DT}{2L} \tag{12}$$

Minimum inductor current is

$$I_{min} = I_L - \frac{\Delta i_L}{2} = \frac{V_s D}{R(1-D)^2} - \frac{V_s DT}{2L} \tag{13}$$

Minimum combination of inductance and switching frequency in CCM is

$$(Lf)_{min} = \frac{(1-D)^2 R}{2} \tag{14}$$

$$L_{min} = \frac{(1-D)^2 R}{2f} \tag{15}$$

Determining the component values

For a design perspective inductance is usually expressed in terms of the desired current ripple. The method no.2 presented in Week 9 is used. Consider the following

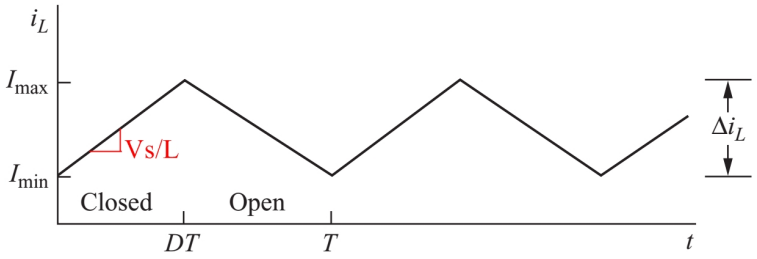

For the On time,

$$\Delta I_L = slope \times DT = \frac{V_s}{L} DT = 0 \tag{16}$$

Rearranging,

$$L = \frac{V_s DT}{\Delta i_L} = \frac{V_s D}{f \Delta i_L} \tag{17}$$

Determining the component values

Peak to peak output ripple can be calculated using capacitor current waveform

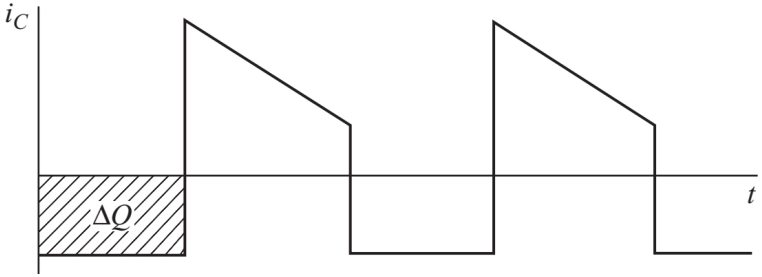

$$|\Delta Q| = \left(\frac{V_o}{R}\right) DT = C\Delta V_o \quad (18)$$

The ripple voltage is

$$\Delta V_o = \frac{V_o DT}{RC} = \frac{V_o D}{RCf} \quad (19)$$

or

$$\frac{\Delta V_o}{V_o} = \frac{D}{RCf} \quad (20)$$

Capacitor value is given as

$$C = \frac{D}{R(\Delta V_o / V_o) f} \quad (21)$$

Example 6-6

Students are advised to solve it by themselves.

Application of basic converters in PV application

The basic converters studied so far are widely used in renewable energy applications.
As part of this course, we shall discuss the use of these basic converters for PV applications, however, the theory of the PV module will not be discussed fully.
Students are advised to study the PV physics themselves.

I-V curve

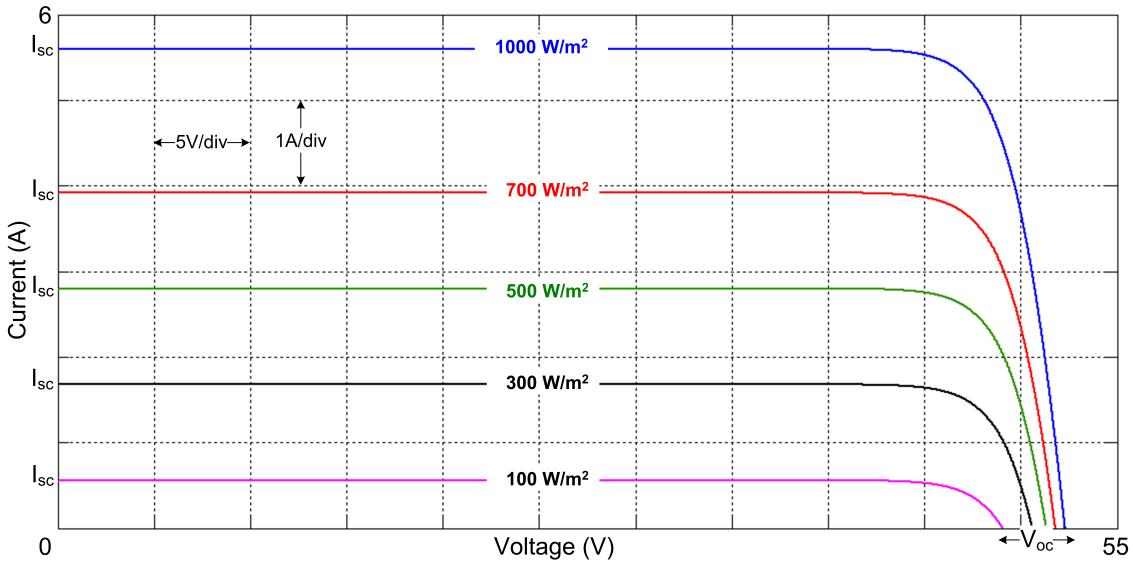
6
Isc
1000 W/m2
5V/div
1A/div
Isc
700 W/m2
Current (A)
Isc
500 W/m2
Isc
300 W/m2
Isc
100 W/m2
0
Voltage (V)
Voc
55

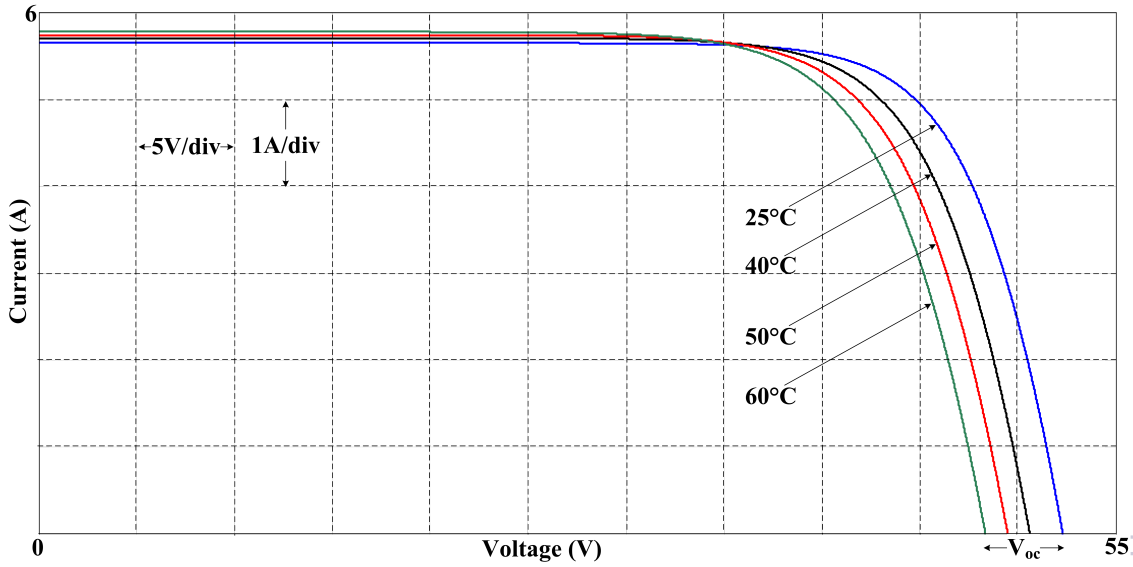
6
5V/div
1A/div
Current (A)
25°C
40°C
50°C
60°C
0
Voltage (V)
Voc
55

P-V curve

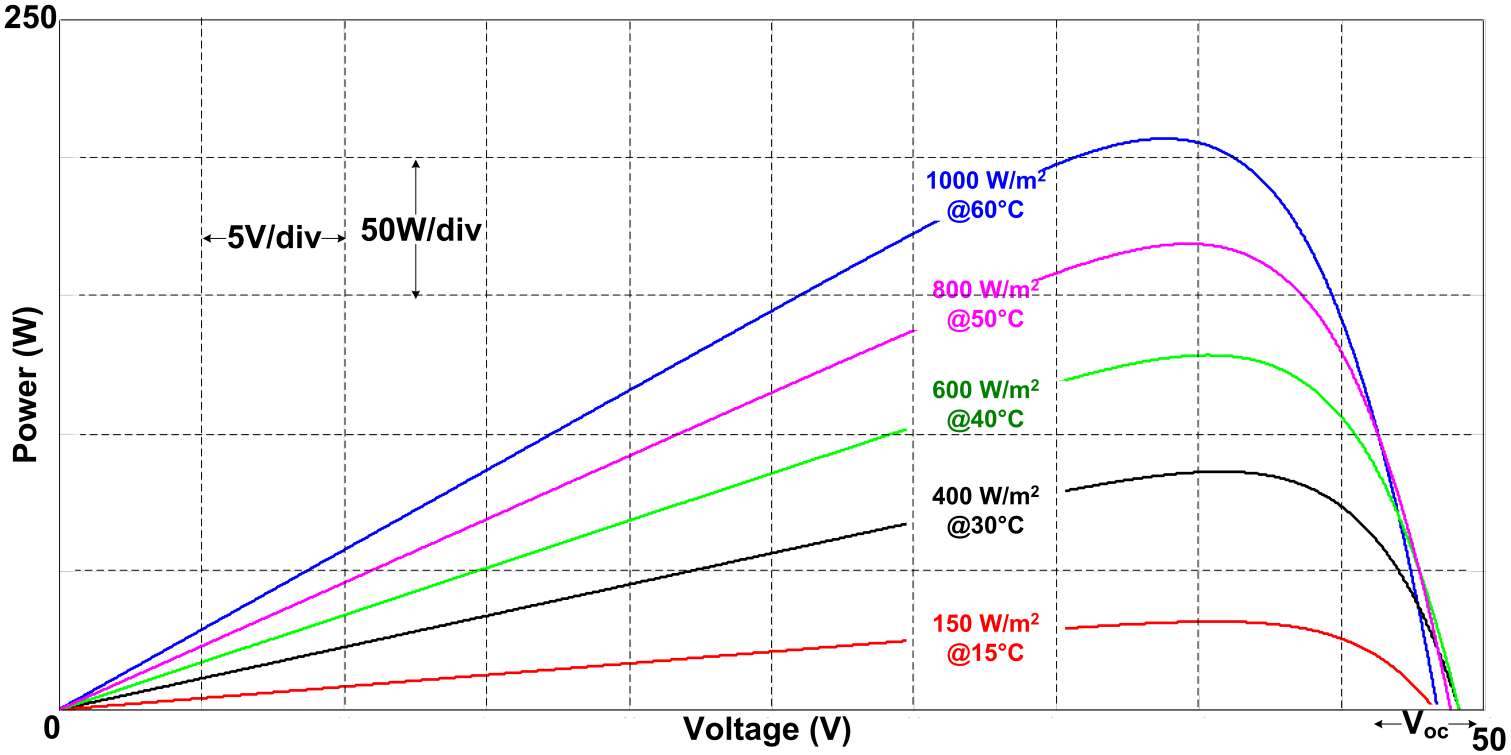

The PV curve under uniform environmental conditions is shown. The purpose of dc-dc converter is to match the source impedance with the load impedance.

Buck converter for PV interfacing

Consider the following figure

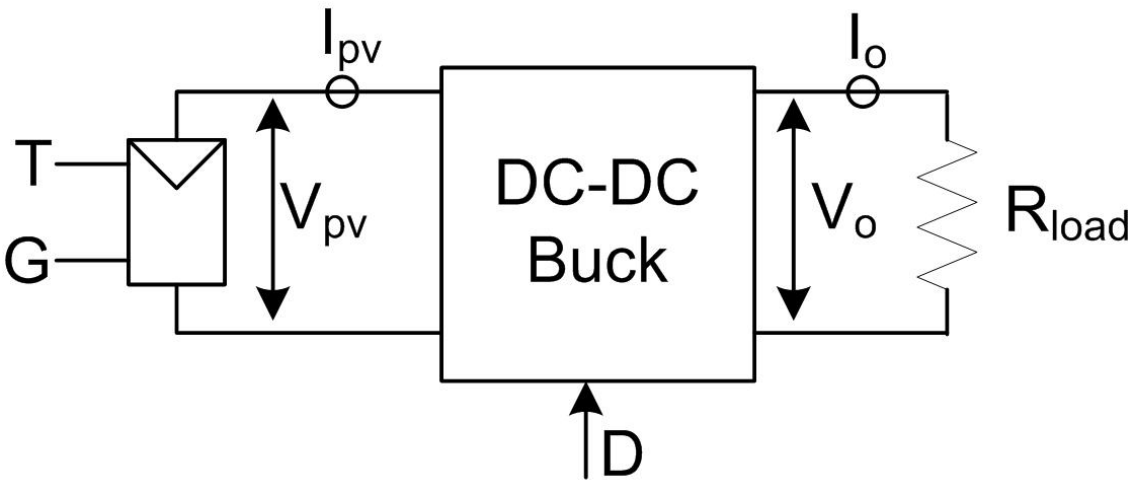

Using the transfer function of buck converter, $V_o = DV_{pv}, I_o = \frac{I_{pv}}{D}$.
Therefore, the equivalent resistance of the circuit seen by the PV source is

$$R_{pv} = \frac{V_{pv}}{I_{pv}} = \frac{\frac{V_o}{D}}{I_o D} = \frac{V_o}{I_o D^2} = \frac{R_{load}}{D^2} \tag{22}$$

This means that buck converter makes the load resistance look larger to the source.

Buck converter for PV interfacing

Consider the characteristic curve of SANYO-HIT220A01 under STC.

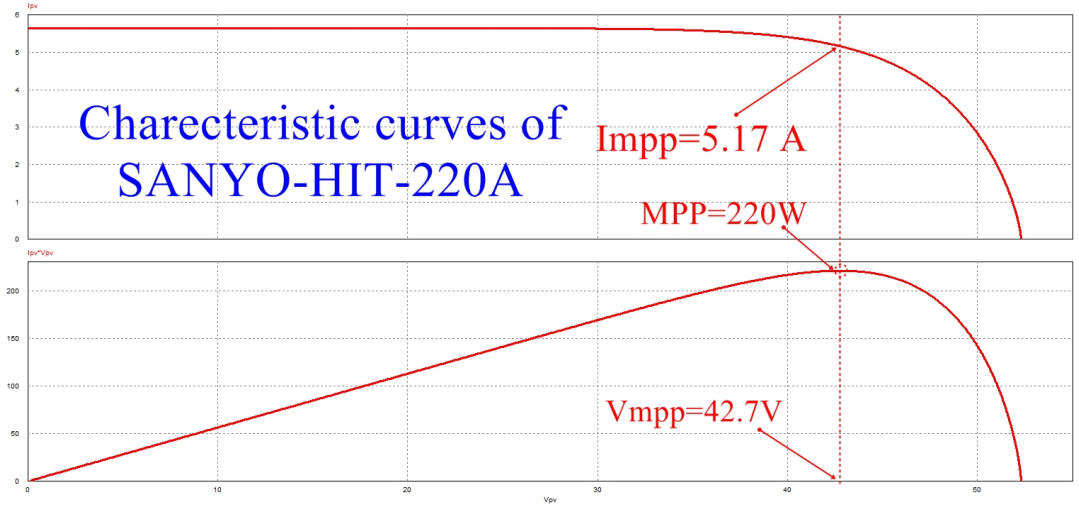

The PV panel give maximum power if R=8.25Ω is connected directly. But the input as well as output varies.

Buck converter for PV interfacing

Any other value cannot extract maximum power

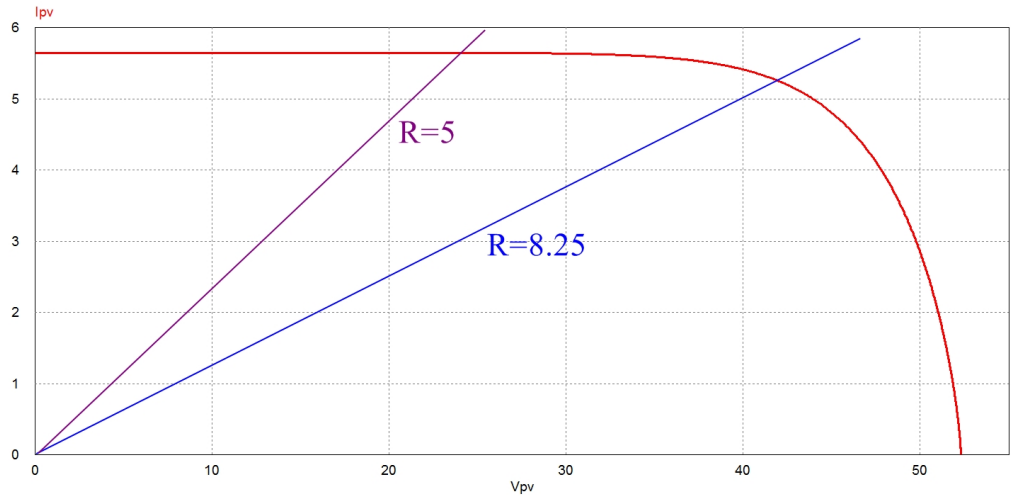

Using a buck converter, Duty cycle can be adjusted to match the load impedance such that, if R_{load}=5Ω. then D is calculated to be 0.77 using (22).
(22) shows that for D=1 $R_{pv} = R_{load}$ and at D=0 $R_{pv} = \infty$ i.e., an open circuit. Therefore, buck converter scans only one half of the full I-V curve and cannot track MPP if $R_{load} > R_{pv}$.

Boost converter with PV source

If a dc-dc boost converter is used as an interface with the load resistance then following are the important points.
For a loss less converter

$$P_{in} = P_{pv} = P_o \tag{23}$$

Also the input resistance can be equated to the output resistance for impedance matching

$$R_{PV} = \frac{V_{PV}}{I_{PV}} = \frac{(1-D)V_o}{\frac{I_o}{1-D}} = (1-D)^2\frac{V_o}{I_o} = (1-D)^2 Ro \tag{24}$$

This means that a boost converter reflects a high load resistance to a low resistance on the source side.
From (24) it is obvious that if the load resistance is less than the source resistance, the boost converter cannot deliver maximum power to the circuit.

Buck-Boost converter with PV source

If a dc-dc buck-boost converter is used as an interface with the load resistance then following are the important points.
For a loss less converter

$$P_{in} = P_{pv} = P_o \tag{25}$$

Also the input resistance can be equated to the output resistance for impedance matching

$$R_{PV} = \frac{V_{PV}}{I_{PV}} = \frac{\frac{(1-D)V_o}{D}}{\frac{DI_o}{1-D}} = (\frac{(1-D)}{D})^2(\frac{Vo}{I_o}) = (\frac{1-D}{D})^2 R_o \tag{26}$$

For any load resistance if D=0 then R_{pv} becomes infinity i.e.e open circuit voltage and for D=1 R_{pv} becomes zero i.e., short circuit current. So, a buck-boost converter is capable of scanning the entire I-V curve of a solar module.
But can load resistance be 0 in real ? There are some other constraints that needs discussion.

The Comparison

Although the basic dc-dc converters may look same, their operation has a lot of difference in PV applications.
Buck converter has a discontinuous input current which means that the input current is averaged over one switching period. This implies that the desired MPP operation is "averaged". This issue persists in a buck-boost converter.
The boost converter has continuous input current therefore, the MPPT is exact.
The buck-boost converter has EMI issues because of large input and output capacitor required.

Insight about buck and boost converters

For a battery load

Buck converter

PV module voltage must be greater or equal to the battery voltage for the power to flow. It is because the output voltage is equal to or less than the input voltage

Boost converter

PV module voltage must be greater or equal to the battery voltage for the power to flow. This is a particular advantage under cloudy conditions when MPP voltage drops lower than the battery voltage.

Insight about buck and boost converters

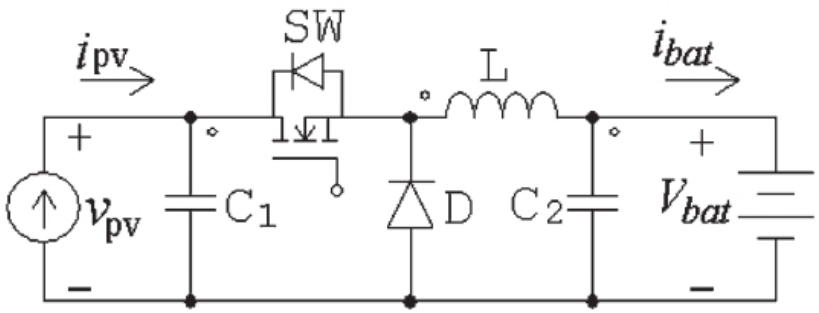

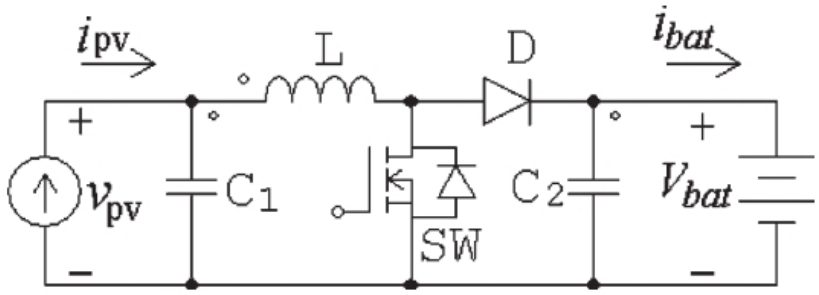

For same inductor ripple the boost topology requires more inductance than the buck converter. However, the rms inductor current is much lower than buck converter.

Buck converter requires large capacitor at input to compensate for the discontinuous input current.

Boost converter may not require an input capacitor, however generally a small capcitor is added to further smoothen the PV current and voltage.

Insight about buck and boost converters

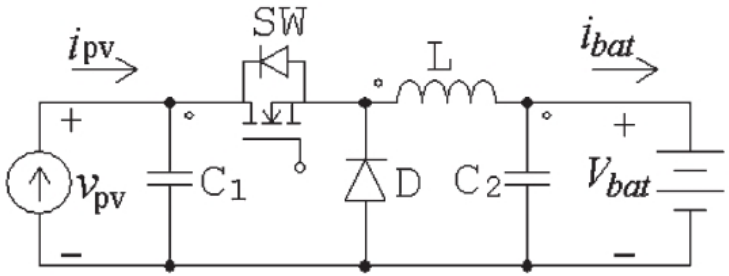

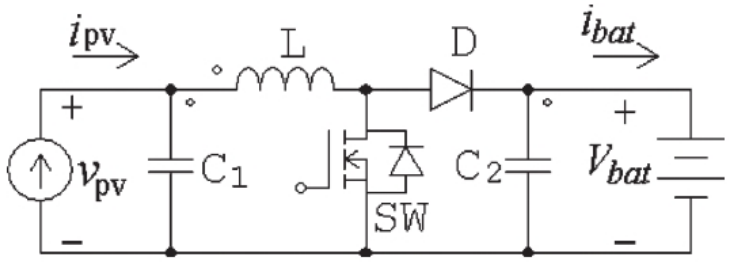

More in Xiao, W., et.al. (2007). Topology study of photovoltaic interface for maximum power point tracking. IEEE TIE

Boost converter require power mosfet with lower current rating than a buck converter.
Buck requires high side driver circuit with additional components which make it complex and expensive than a boost.
During night, the diode of boost converter acts as a blocking diode so that reverse current may not flow.
Buck converter requires an additional diode to do so. This increases power loss.